# ITAC

IP65 IK10

microPrim™

MOTION SENSOR

TURTLE FRIENDLY



**EN**

**Circular contemporary surface-mounted bulkhead fixtures. Resilient but attractive exterior bulkheads built to perform and last.**

**FR**

*Hublots circulaires contemporains avec éclairage frontal et latéral. Hublots d'extérieur sobres mais intéressants conçus pour ses performances et sa pérennité.*

**ES**

*Mamparas circulares de contemporáneas de montaje en superficie. Mamparos exteriores resistentes pero atractivos construidos para funcionar y durar.*

## Product colour code

| - 01 | - 02 | - 03 | - 05 | - 06 |
|---|---|---|---|---|
| Black | Dark Grey | White | Matt Silver | Bronze |
| RAL 9011 | RAL 7043 | RAL 9003 | RAL 9006 | RAL 6014 |

## Special finishes upon request

| - SU01 | - SU02 | - SU03 | - SU04 | - SW01 | - SW02 | - SW03 |
|---|---|---|---|---|---|---|
| Concrete | Softscape | Stone | Corten | Oak | Walnut | Pine |
| Urban | Urban | Urban | Urban | Woodland | Woodland | Woodland |





Eglise de marly canton de fribourg, Fribourg, Switzerland

## Luminaire structure

**EN**

- Die-cast aluminium housing and frame
- Pre-treated before powder coating ensuring high corrosion resistance
- Two cable entries for through wiring
- Stainless steel fasteners in grade 304 with zinc flake coating (ZFC)
- Durable silicone rubber gasket
- Opal UV-stabilised polycarbonate diffuser
- Integral control gear
- Optional surface mounting box for easy wiring or conduit connection when wiring from behind is not possible

**FR**

*- Boîtier et cadre en aluminium moulé*
*- Pré-traitée avant revêtement en poudre assurant une résistance élevée à la corrosion*
*- Deux entrées de câble pour le câblage traversant*
*- Vis en acier inoxydable 304, Enduit de zinc lamellaire (ZFC)*
*- Joint en caoutchouc silicone durable*
*- Diffuseur en polycarbonate opale stabilisé aux UV*
*- Driver incorporé*
*- Boîtier saillie optionnel pour câblage facile ou repiquage câbles si câblage arrière impossible*

**ES**

*- Carcasa y marco de aluminio fundido a presión*
*- Pretratado antes del recubrimiento en polvo que garantiza una alta resistencia a la corrosión*
*- Dos entradas de cable para el cableado*
*- Sujetadores de acero inoxidable grado 304, Recubierto de escamas de zinc (ZFC)*
*- Junta de goma de silicona duradera*
*- Difusor de policarbonato estabilizado a los rayos UV opal*
*- Equipo de control integral*
*- Caja de montaje en superficie opcional para facilitar el cableado o la conexión de conductos cuando no es posible realizar el cableado desde atrás*

## Feature symbols




## Light symbols



G

# ITAC

Product code guide

IT-31962 - G - 8030 - DI - 01 - SCE-ITAC-1

Optic | CCT / CRI | Dimming type | Product colour | Accessory

**CCT / CRI**
8030 – 3000K CRI80
8040 – 4000K CRI80
TW – Tunable white 2700K - 6500K

**Dimming type**
ND – On/Off
DI – 1-10V
DA – DALI

**Product colour**
01 – Black
02 – Dark Grey
03 – White
05 – Matt Silver
06 – Bronze

| | Product code | Light source | Power | Lumen | Weight | Optic | CCT / CRI | Dimming type |
|---|---|---|---|---|---|---|---|---|
| | | | | | | G | | |
| **Flat diffuser** | | | | | | | | |
| ITAC 1 | **IT-31962** | 80 LED | 20 W | 1747 - 1839 lm | 2.9 kg | 120°x180° | 8030 \| 8040 | ND \| DI \| DA |
| **Flat diffuser - With integrated motion sensor** | | | | | | | | |
| ITAC 1 | **IT-31962-1MS** | 80 LED | 20 W | 1747 - 1839 lm | 2.9 kg | 120°x180° | 8030 \| 8040 | ND \| DI |
| **Dome diffuser** | | | | | | | | |
| ITAC 2 | **IT-31972** | 80 LED | 20 W | 1676 - 1764 lm | 2.9 kg | 120°x180° | 8030 \| 8040 | ND \| DI \| DA |
| **Dome diffuser - With integrated motion sensor** | | | | | | | | |
| ITAC 2 | **IT-31972-1MS** | 80 LED | 20 W | 1676 - 1764 lm | 2.9 kg | 120°x180° | 8030 \| 8040 | ND \| DI |
| **Flat diffuser - Tunable white** | | | | | | | | |
| ITAC 1 | **IT-31963** | 160 LED | 20 W | 1684 lm | 2.9 kg | 115°x115° | TW | DA |
| **Dome diffuser - Tunable white** | | | | | | | | |
| ITAC 2 | **IT-31973** | 160 LED | 20 W | 1713 lm | 2.9 kg | 116°x116° | TW | DA |





| | Surface mounting box for easy cabling (ITAC 1) ø357x40 mm | Surface mounting box for easy cabling (ITAC 2) ø357x40 mm | Remote controller for the motion sensor - 1-10V (A34191) |
|---|---|---|---|
| | **SCE-ITAC-1** | **SCE-ITAC-2** | **A34391** |
| IT-31962 | • | | |
| IT-31972 | | • | |
| IT-31962-1MS | • | | • |
| IT-31972-1MS | | • | • |




**DALI Control System** Page 784



ITAC 1

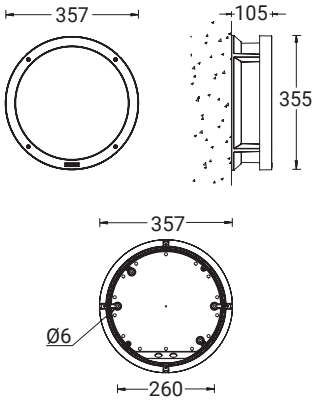




ITAC 2

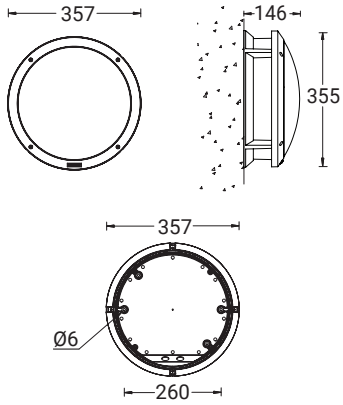


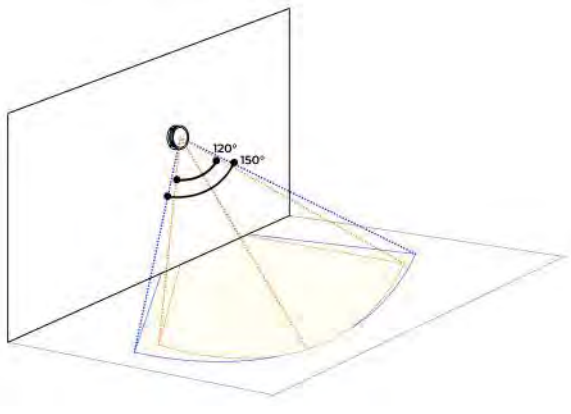


**ITAC**

**Motion sensor - Microwave - 1 -10 V**
Adjustable sensor: (10 seconds – 15 minutes)
150° Sensitivity
Sensor detection area: 1.0 - 4.0 m

**Motion sensor - Microwave - On/Off**
Adjustable sensor: (5 seconds – 30 minutes)
120° Sensitivity
Sensor detection area: 2.6 - 7.0 m

